Product data sheet

Specifications

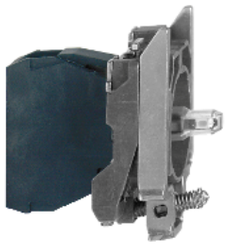

Light block with body fixing collar, Harmony XB4, metal, orange, integral LED, 24V AC DC

ZB4BVB5

To be discontinued on: 31 March 2023

To be discontinued

Important message : All colored LED are replaced with a single Universal LED block for use with new illuminated heads (more information at se.com/harmonyxb4 or se.com/harmonyxb5)

Main

Range of product	Harmony XB4
Product or component type	Complete body/light block assembly
Device short name	ZB4
Fixing collar material	Zamak
Sale per indivisible quantity	1
Connections - terminals	Screw clamp terminals, <= 2 x 1.5 mm² with cable end Screw clamp terminals, >= 1 x 0.22 mm² without cable end
Light source	Protected LED
Bulb base	Integral LED
Light source colour	Orange
[Us] rated supply voltage	24 V AC/DC at 50/60 Hz

Complementary

CAD overall width	30 mm
CAD overall height	47 mm
CAD overall depth	37 mm
Terminals description ISO n°1	(X1-X2)PL
Net weight	0.054 kg
Tightening torque	0.8…1.2 N.m conforming to EN 60947-1
Shape of screw head	Cross compatible with Philips no 1 screwdriver Cross compatible with pozidriv No 1 screwdriver Slotted compatible with flat Ø 4 mm screwdriver Slotted compatible with flat Ø 5.5 mm screwdriver
[Ui] rated insulation voltage	600 V (pollution degree 3) conforming to EN 60947-1
[Uimp] rated impulse withstand voltage	6 kV conforming to EN 60947-1
Signalling type	Steady
Supply voltage limits	19.2…30 V DC 21.6…26.4 V AC
Current consumption	18 mA

Disclaimer: This documentation is not intended as a substitute for and is not to be used for determining suitability or reliability of these products for specific user applications

Service life	100000 h at rated voltage and 25 °C
Surge withstand	1 kV conforming to IEC 61000-4-5
Device presentation	Basic sub-assemblies

Environment

Protective treatment	TH
Ambient air temperature for storage	-40…70 °C
Ambient air temperature for operation	-40…70 °C
Electrical shock protection class	Class I conforming to IEC 60536
Standards	EN/IEC 60947-5-4 EN/IEC 60947-1 JIS C8201-5-1 EN/IEC 60947-5-1 CSA C22.2 No 14 EN/IEC 60947-5-5 UL 508 JIS C8201-1
Product certifications	DNV CSA LROS (Lloyds register of shipping) UL listed GL BV
Vibration resistance	5 gn (f= 2…500 Hz) conforming to IEC 60068-2-6
Shock resistance	30 gn (duration = 18 ms) for half sine wave acceleration conforming to IEC 60068-2-27 50 gn (duration = 11 ms) for half sine wave acceleration conforming to IEC 60068-2-27
Resistance to fast transients	2 kV conforming to IEC 61000-4-4
Resistance to electromagnetic fields	10 V/m conforming to IEC 61000-4-3
Resistance to electrostatic discharge	6 kV on contact (on metal parts) conforming to IEC 61000-2-6 8 kV in free air (in insulating parts) conforming to IEC 61000-2-6
Electromagnetic emission	Class B conforming to IEC 55011

Packing Units

Unit Type of Package 1	Db
Number of Units in Package 1	1
Package 1 Height	5.600 cm
Package 1 Width	3.400 cm
Package 1 Length	5.400 cm
Package 1 Weight	52.000 g
Unit Type of Package 2	Doboz
Number of Units in Package 2	200
Package 2 Height	30.000 cm
Package 2 Width	30.000 cm
Package 2 Length	40.000 cm
Package 2 Weight	10.835 kg
Unit Type of Package 3	P06
Number of Units in Package 3	1600
Package 3 Height	77.000 cm
Package 3 Width	80.000 cm

Package 3 Length	60.000 cm
Package 3 Weight	100.516 kg

Offer Sustainability

Sustainable offer status	Green Premium product
REACh Regulation	REACh Declaration
REACh free of SVHC	Yes
EU RoHS Directive	Pro-active compliance (Product out of EU RoHS legal scope) EU RoHS Declaration
Mercury free	Yes
China RoHS Regulation	China RoHS declaration
RoHS exemption information	Yes
Environmental Disclosure	Product Environmental Profile
Circularity Profile	End of Life Information
WEEE	The product must be disposed on European Union markets following specific waste collection and never end up in rubbish bins
California proposition 65	WARNING: This product can expose you to chemicals including: Lead and lead compounds, which is known to the State of California to cause cancer and birth defects or other reproductive harm. For more information go to www.P65Warnings.ca.gov

Contractual warranty

Warranty	18 months

Dimensions

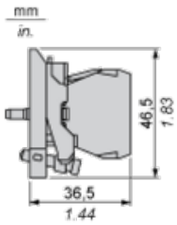

Panel Cut-out for Pushbuttons, Switches and Pilot Lights (Finished Holes, Ready for Installation)

Connection by Screw Clamp Terminals or Plug-in Connectors or on Printed Circuit Board	Connection by Faston Connectors
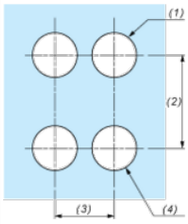	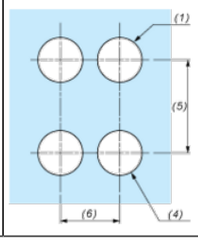
(1) Diameter on finished panel or support **(2)** 40 mm min. / 1.57 in. min. **(3)** 30 mm min. / 1.18 in. min. **(4)** Ø 22.5 mm / 0.89 in. recommended (Ø 22.3 mm $_{0}^{+0.4}$ / 0.88 in. $_{0}^{+0.016}$) **(5)** 45 mm min. / 1.78 in. min. **(6)** 32 mm min. / 1.26 in. min.	

Dimensions

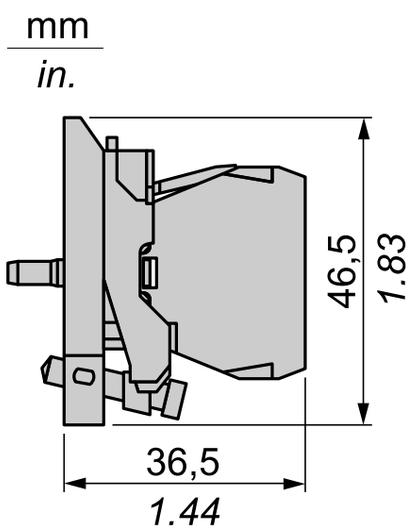

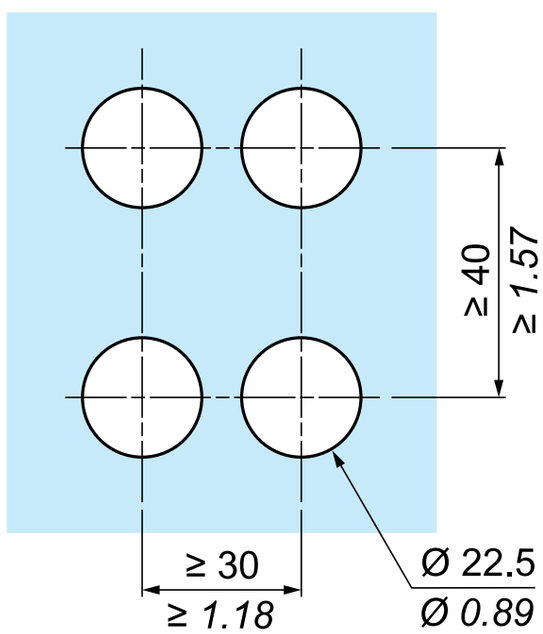

Recommended replacement(s)

ZB4BVB5 is replaced by:

1x		Complete body/light block assembly, Harmony XB4, metal, universal LED, body/ fixing collar, 24V AC DC ZB4BVB1